Fall 2024 CSCI 113-Lab 2; Noah Wiley

1. Op 1 and Op 2 represent two inputs

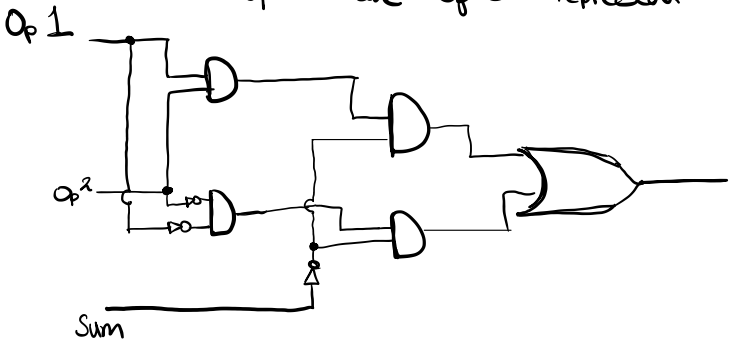

2.

To find both equivalent, we can use a truth table

Logic #1

Sign of OP	Sign of Sum	
0	0	0
0	1	1
1	0	1
1	1	0

Logic #2

Sign of Cin	Sign of Cout	
0	0	0
0	1	1
1	0	1
1	1	0

Both are equivalent

3. Short s1, s2, s3, s4; // type short is 16 bits each

```
s1 = 30,000 + 3000;
s2 = 30,000 + -3000;
s3 = -30,000 + -3000;
s4 = -30,000 + 3000;
cout << s1 << endl << s2 << endl << s3 << endl << s4 << endl;
```

Output:

s1 = -32536 → Incorrect

s2 = 27000 → correct

s3 = 32536 → incorrect

s4 = -27000 → correct

The reason there is incorrect answers is because short is 16 bit data type that is limited by a range of values it can calculate. The errors are a result of over flow happening is because of the program returning on incorrect value for not carrying the extra bit. We can fix this by using different data type that can hold more bits like long int or float.

4. Multiple bit ALU manipulates subtraction operation by using one of the inputs and inventing one of the inputs. ALV will take 2's compliment of one of the input to change the operation sign of the input and the ALU will add 2 inputs to calculate the sum.